ALFRED TEVES BRAKE SYSTEMS (PTY) LTD

TECHNICAL BULLETIN

11 FEBRUARY 2026

ATE1453

(ATE and Teves are registered trademarks of Continental Teves AG & Co oHG and/or its affiliates in Frankfurt Germany and other Countries)

NEW PART NUMBER

Drawing

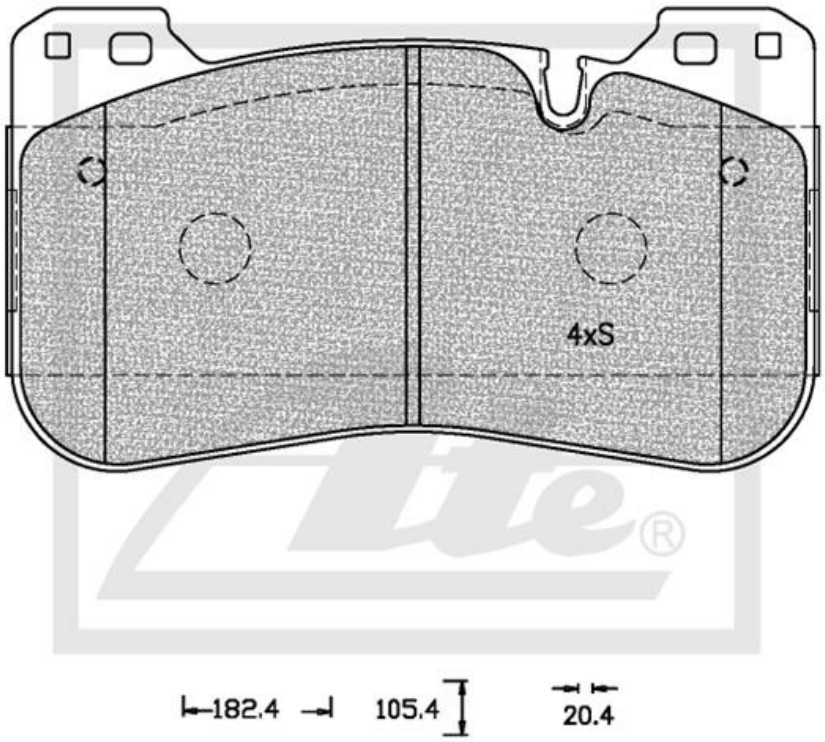

Details of New Part

Brake Pad – Front

Product Dimensions
Length – 182.4mm
Height – 105.7mm
Thickness – 20.4mm

Package Dimensions
Weight – 5500g
L – 295.53mm
W – 238.86mm
H – 102.13mm

Barcode

ATE1453

Position

Front Rear

BMW 2, BMW 3, BMW 4, BMW 5, BMW 8, BMW X5, BMW X6 2019-.

CALL NOW TO ORDER YOUR STOCK!!!

(011) 898 1800

Picture(s) of the vehicle(s) that this part is suitable for

www.ate.co.za

"Single Minded about YOUR Safety"